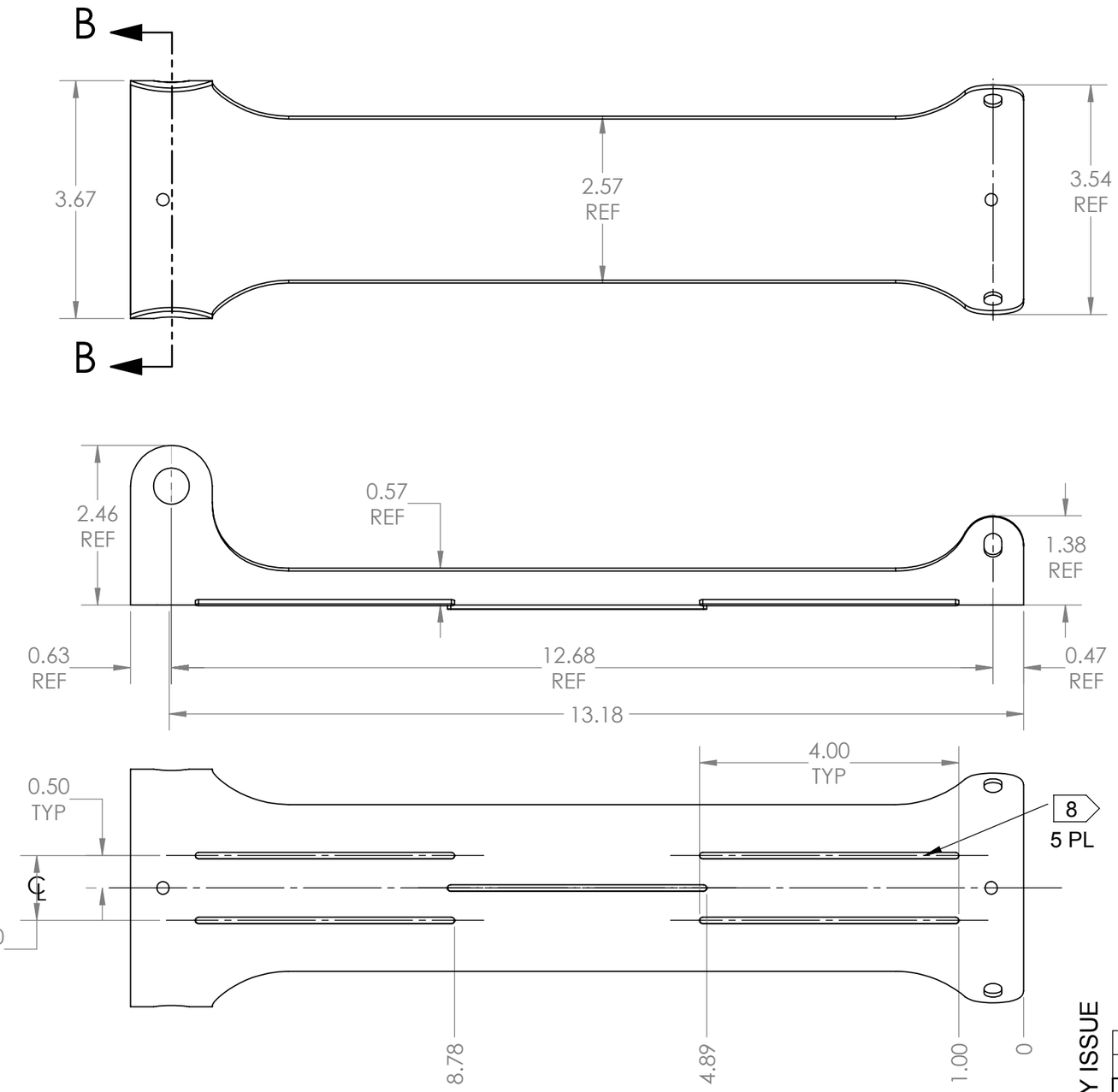

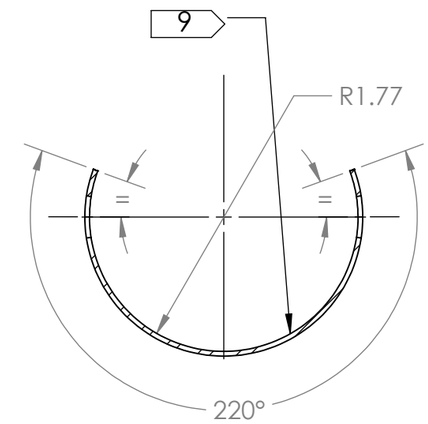

SECTION B-B

NOTES:
1) MATERIAL: N/A
2) FINISH: NONE
3) TOLERANCES: PER DART QSI 018 UNLESS OTHERWISE NOTED
4) UNITS: INCHES UNLESS OTHERWISE NOTED
5) BREAK SHARP EDGES: N/A
6) IDENTIFICATION: PER DART QSI 044 6.1
7) WEIGHT: 0.82 lbs
8) BUILDUP HARD SURFACING 0.06 - 0.13 THICK USING 8259 ROD PER QSI 004 SECTION 4.5 (AUTOMATED WELDING) OR BUILDUP HARD SURFACING 0.06 - 0.13 THICK USING 2059B ROD PER QSI 004 SECTION 4.1 (MANUAL WELDING)
9) COAT ENTIRE TOP (CONCAVE) SURFACE WITH TEXTURED COATING 0.02-0.04 THICK PER DART QSI 005 4.9

D5478-1 PLATE
(MAKE FROM D5478-1F PLATE)

PRELIMINARY ISSUE

REV.	DESCRIPTION	BY	DATE
A	NEW ISSUE	VS	17.03.07

DESIGN	SC	**DART AEROSPACE LTD** HAWKESBURY, ONTARIO, CANADA
DRAWN	VS	
CHECKED	RF	DRAWING NO. D5478 — REV. A6 — SHEET 1 OF 2
MFG. APPR.	DD	
APPROVED		TITLE: WEARPLATE AFT — SCALE: NTS
DE APPR.		
DATE	17.03.07	

COPYRIGHT © 2017 BY DART AEROSPACE LTD
THIS DOCUMENT IS PRIVATE AND CONFIDENTIAL AND IS SUPPLIED ON THE EXPRESS CONDITION THAT IT IS NOT TO BE USED FOR ANY PURPOSE OR COPIED OR COMMUNICATED TO ANY OTHER PERSON WITHOUT WRITTEN PERMISSION FROM DART AEROSPACE LTD.

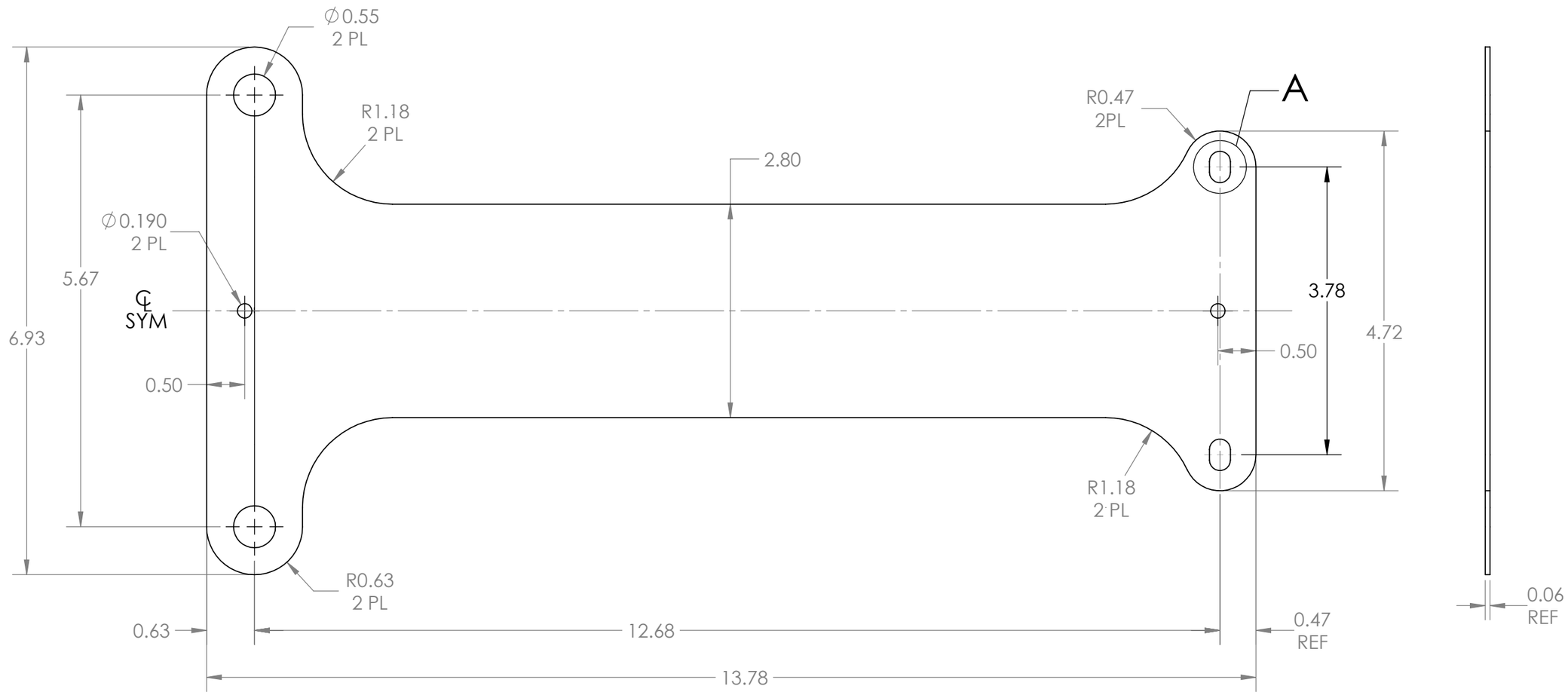

D5478-1F PLATE
(FLAT PATTERN)

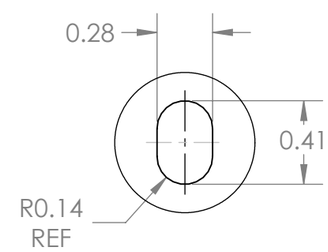

DETAIL A
2 PL

NOTES:
1) MATERIAL: AISI 304/316 STAINLESS STEEL SHEET 18 GAUGE (0.0625 THICK),
PER AMS 5513 OR 5524 OR ASTM A240 OR ASME SA240
REF. DART SPEC. M304S18GA
2) FINISH: NONE
3) TOLERANCES: PER DART QSI 018 UNLESS OTHERWISE NOTED
4) UNITS: INCHES UNLESS OTHERWISE NOTED
5) BREAK SHARP EDGES: 0.005 TO 0.010 MAX
6) IDENTIFICATION: N/A
7) WEIGHT: 0.82 lbs
8) ALL NON DIMENSIONED FEATURES PER CAD FILE D5478-1F-REV.A.DXF

PRELIMINARY ISSUE

DESIGN	SC	**DART AEROSPACE LTD** HAWKESBURY, ONTARIO, CANADA
DRAWN	VS	
CHECKED	RF	DRAWING NO. D5478 — REV. A6 — SHEET 2 OF 2
MFG. APPR.	DD	
APPROVED		TITLE: WEARPLATE AFT — SCALE: NTS
DE APPR.		
DATE	17.03.07	

COPYRIGHT © 2017 BY DART AEROSPACE LTD
THIS DOCUMENT IS PRIVATE AND CONFIDENTIAL AND IS SUPPLIED ON THE EXPRESS CONDITION THAT IT IS NOT TO BE USED FOR ANY PURPOSE OR COPIED OR COMMUNICATED TO ANY OTHER PERSON WITHOUT WRITTEN PERMISSION FROM DART AEROSPACE LTD.